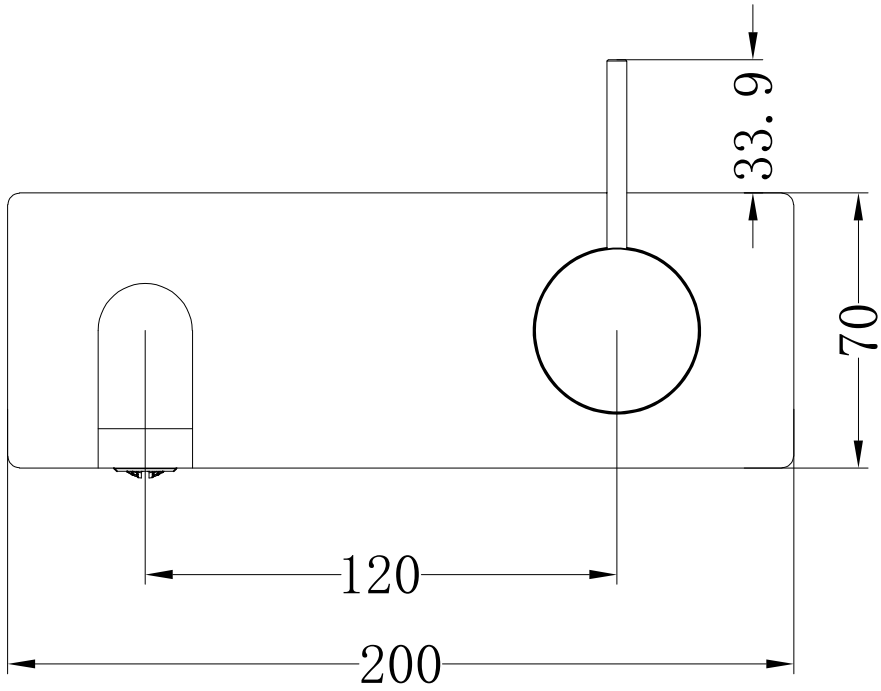
33.9
70
120
200

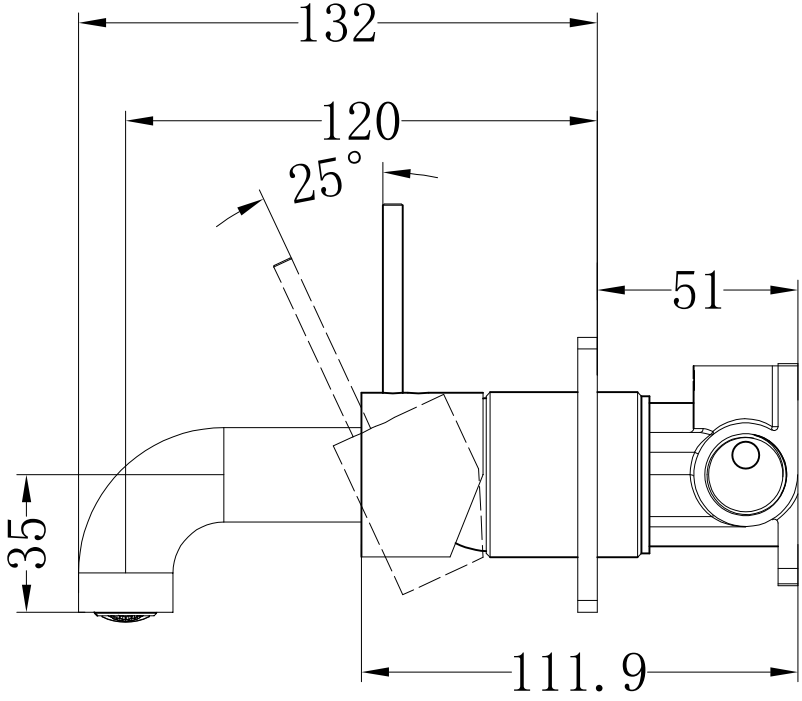
132
120
25°
51
35
111.9