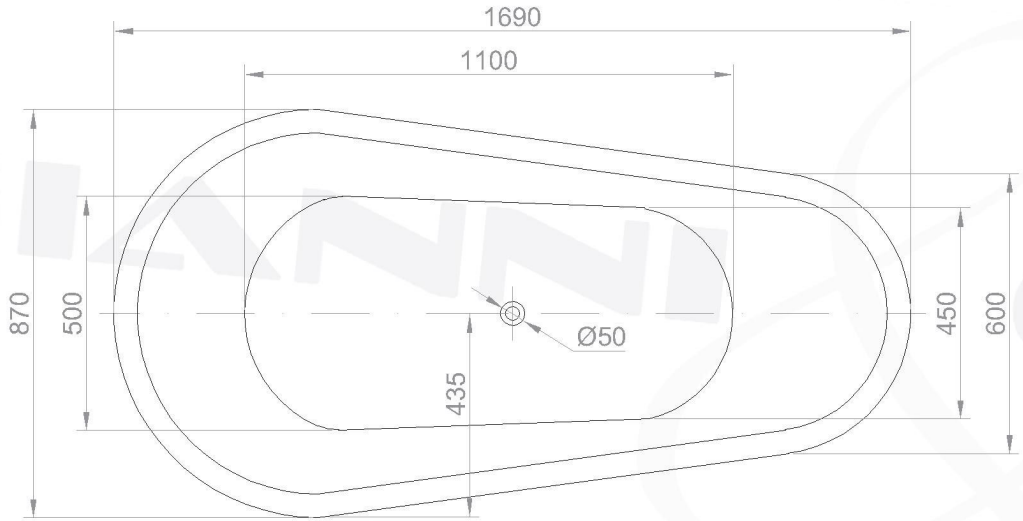

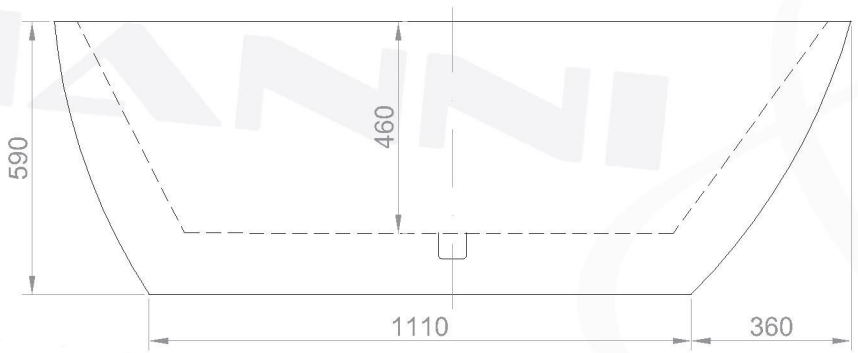

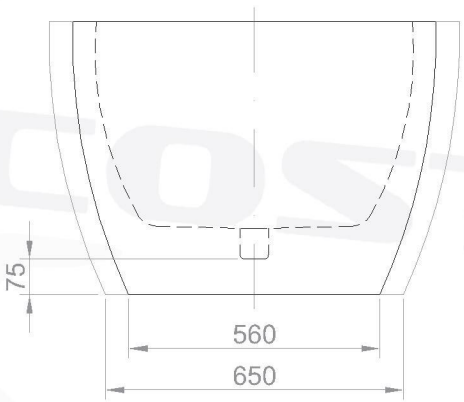

Model
ONDA-B 1690
GC1009B

Gianni & Costa
Unit 18/31 Maddox St
Alexandria NSW 2015
(02)9516 5885