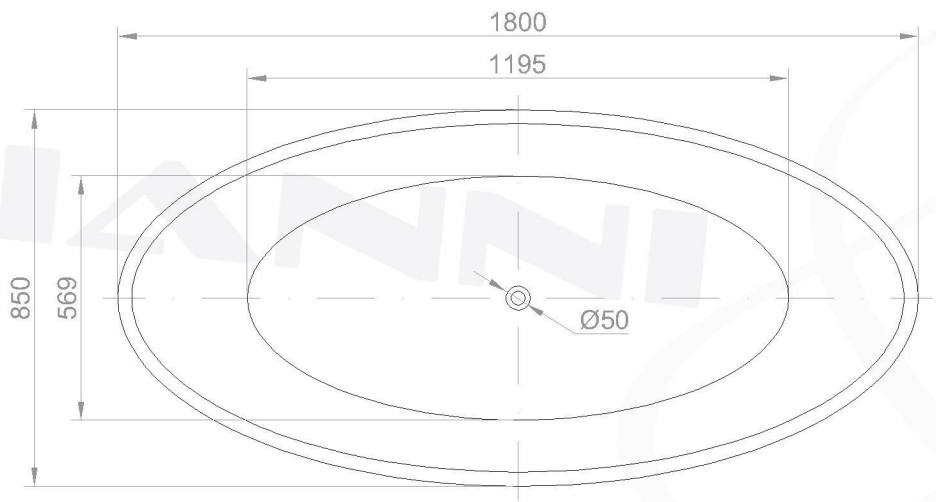


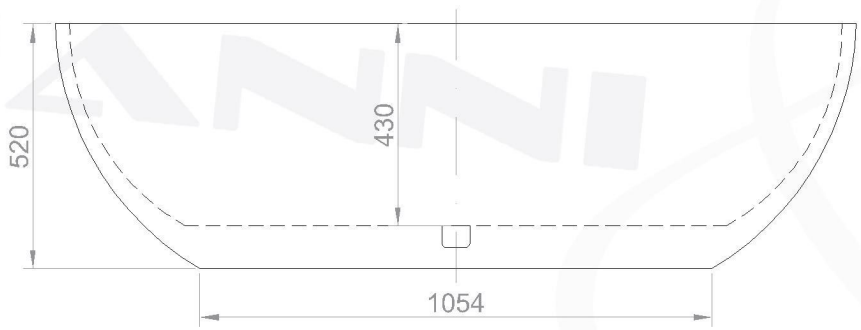


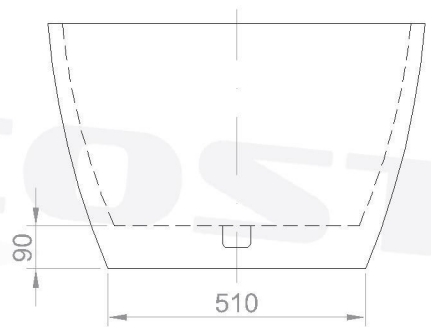


**Model**
**ISOLA 1800 Solid Surface**
**GC1057**

**Gianni & Costa**
**Unit 18/31 Maddox St**
**Alexandria NSW 2015**
**(02)9516 5885**