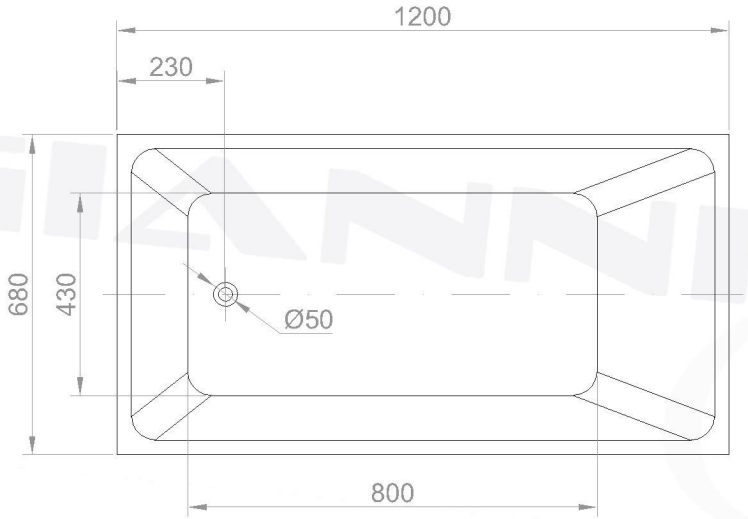

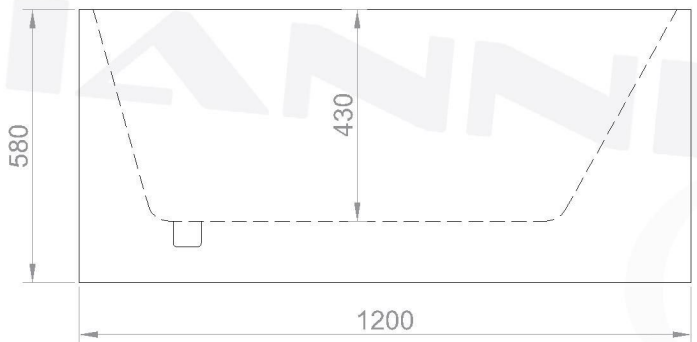

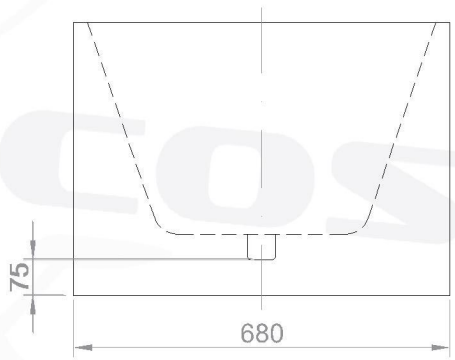

GIANNI & COSTA™

Model
SANTINA 1200
GC6816

Gianni & Costa
Unit 18/31 Maddox St
Alexandria NSW 2015
(02)9516 5885

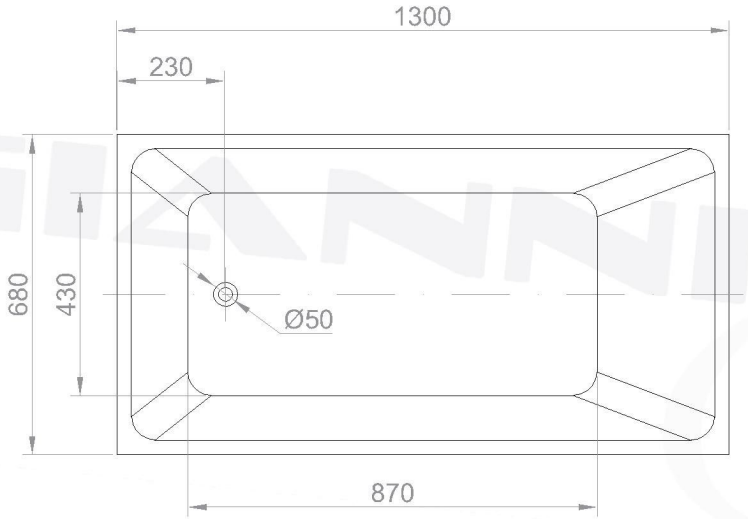

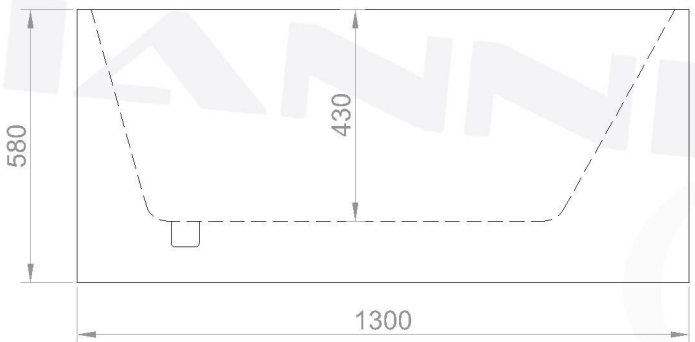

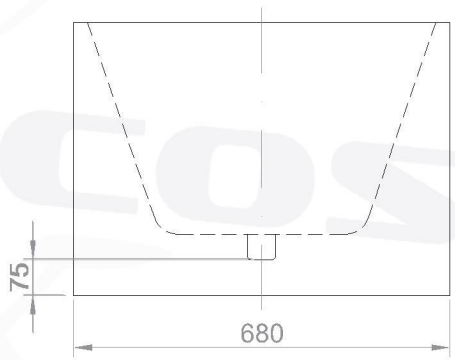

Model
SANTINA 1300
GC6816

Gianni & Costa
Unit 18/31 Maddox St
Alexandria NSW 2015
(02)9516 5885

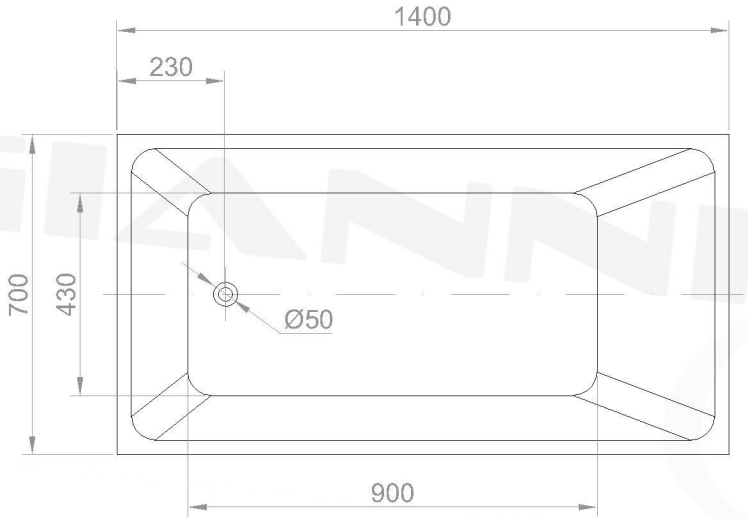

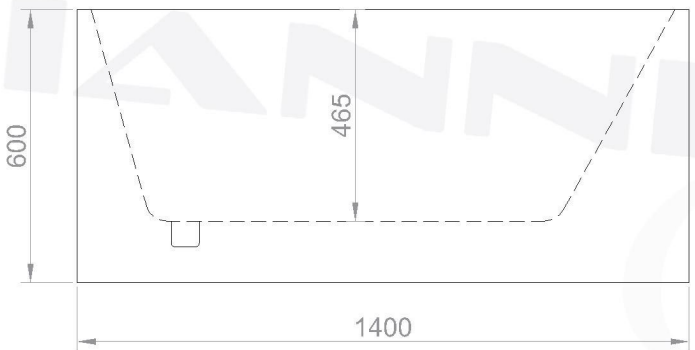

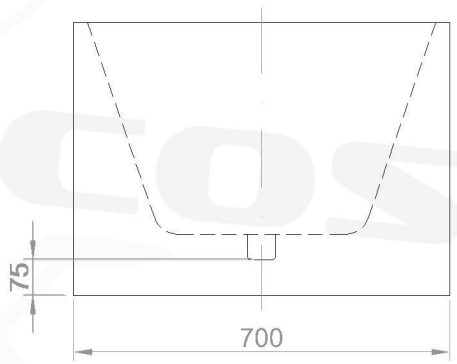

Model
SANTINA 1400
GC6816

Gianni & Costa
Unit 18/31 Maddox St
Alexandria NSW 2015
(02)9516 5885

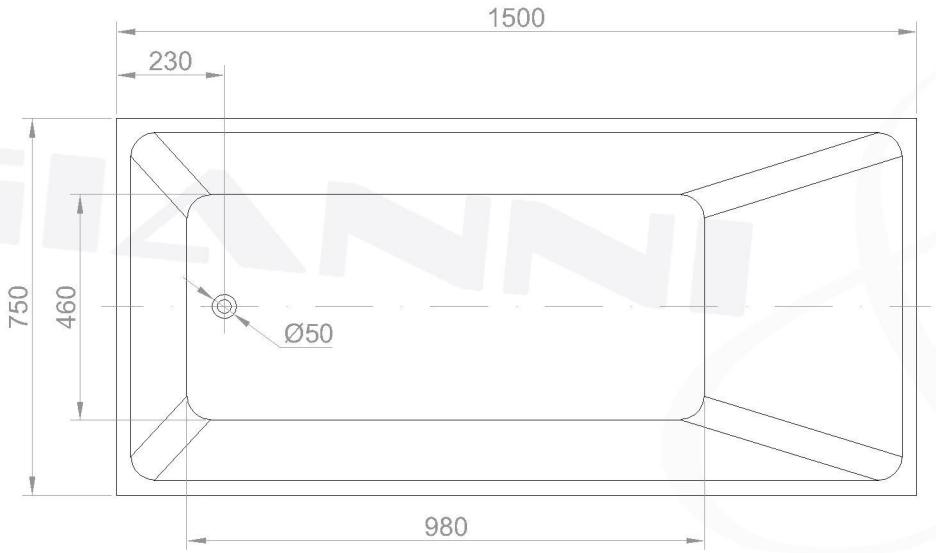

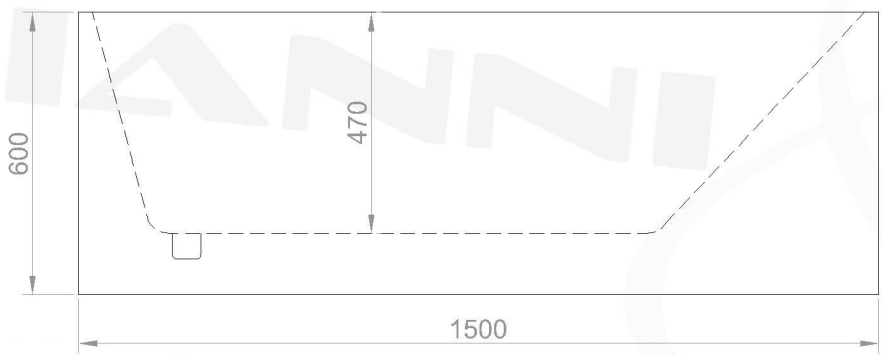

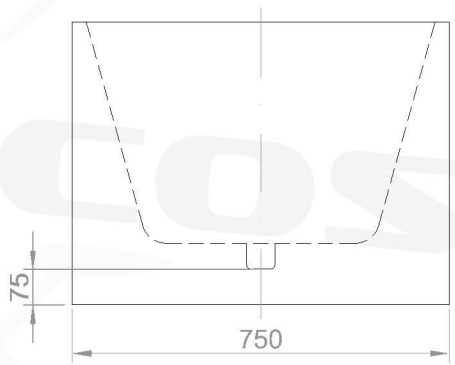

Model
SANTINA 1500
GC6816

Gianni & Costa
Unit 18/31 Maddox St
Alexandria NSW 2015
(02)9516 5885

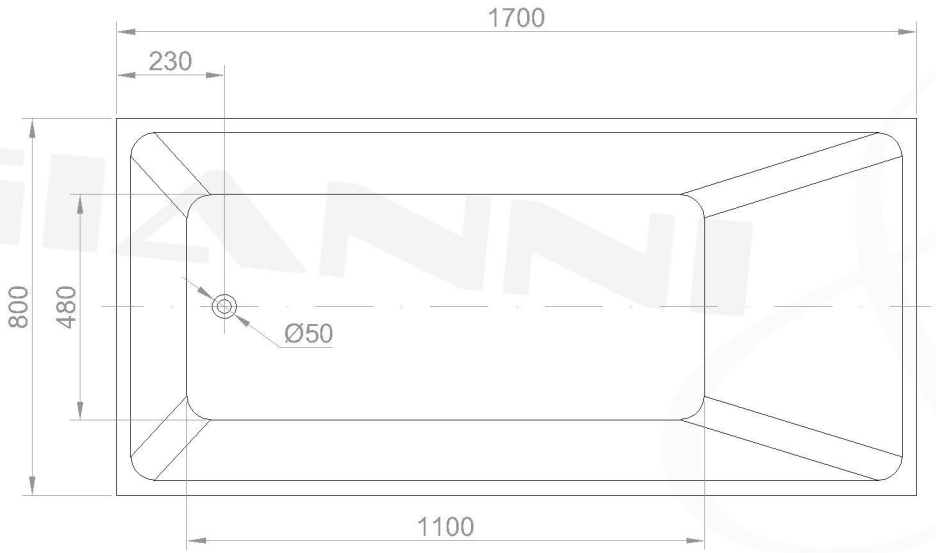

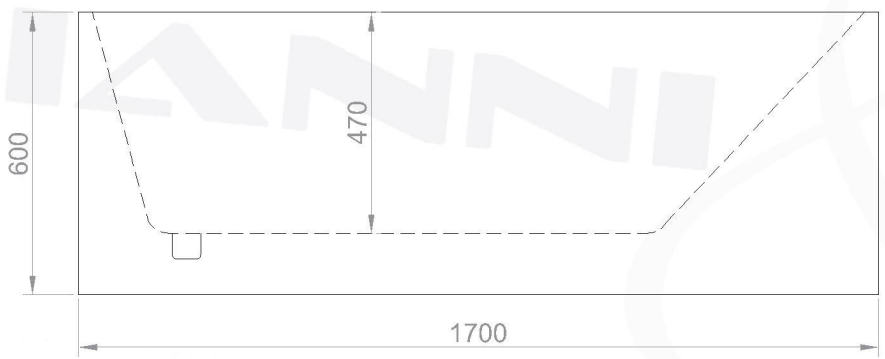

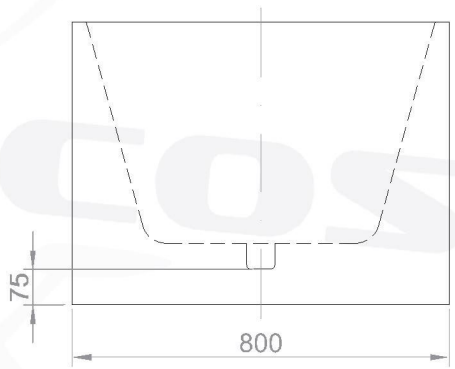

GIANNI & COSTA™

Model
SANTINA 1700
GC6816

Gianni & Costa
Unit 18/31 Maddox St
Alexandria NSW 2015
(02)9516 5885